DIMENSIONI D'INGOMBRO – OVERALL DIMENSIONS – DIMENSIONS D'ENCOMBREMENT
RAUMBEDARF – DIMENSIONES TOTALES – DIMENSÕES

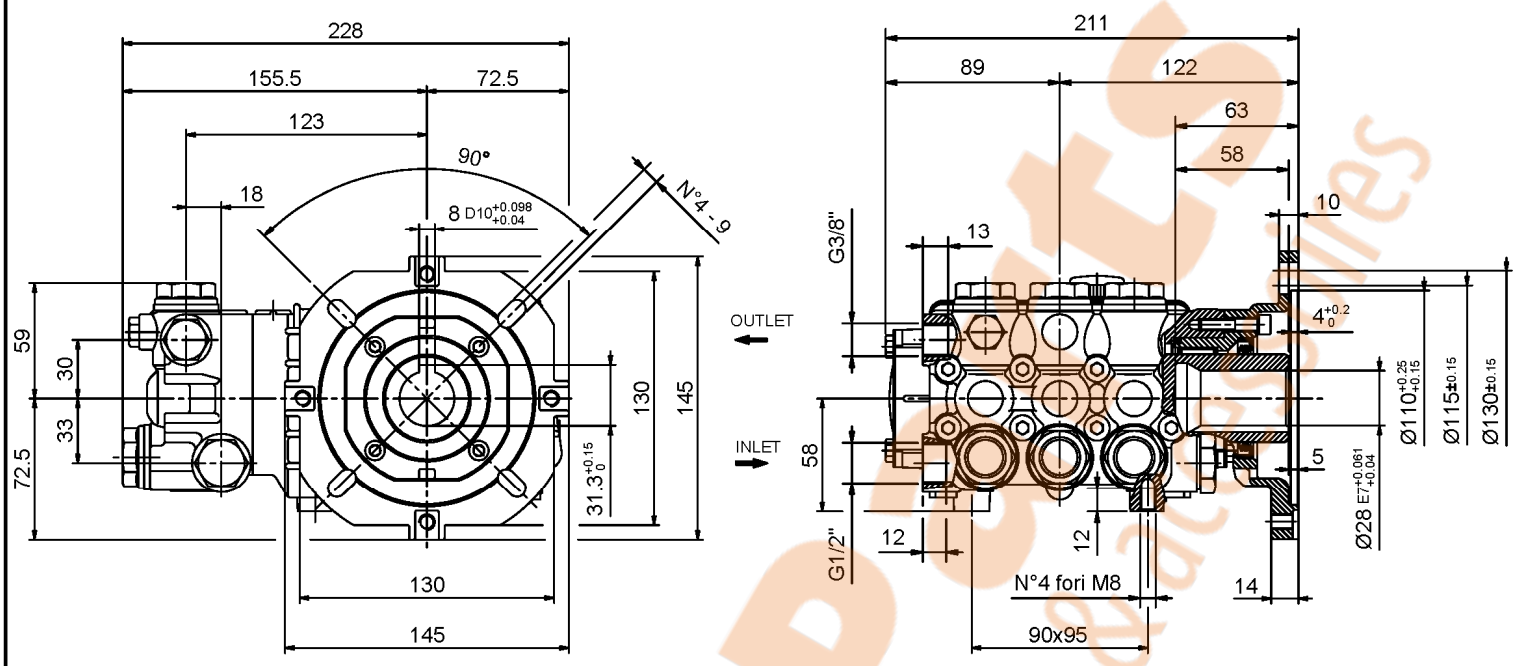

W97 – W112 – W124
W130 – W130HH
W140 – W140HH
W150 – W154 - W154HH
W170 – W200 – W204
WW116
WW136 – WW156 - WW176
WW186 - WW206 – WW209

B

COD. DIS. 44.2145.00

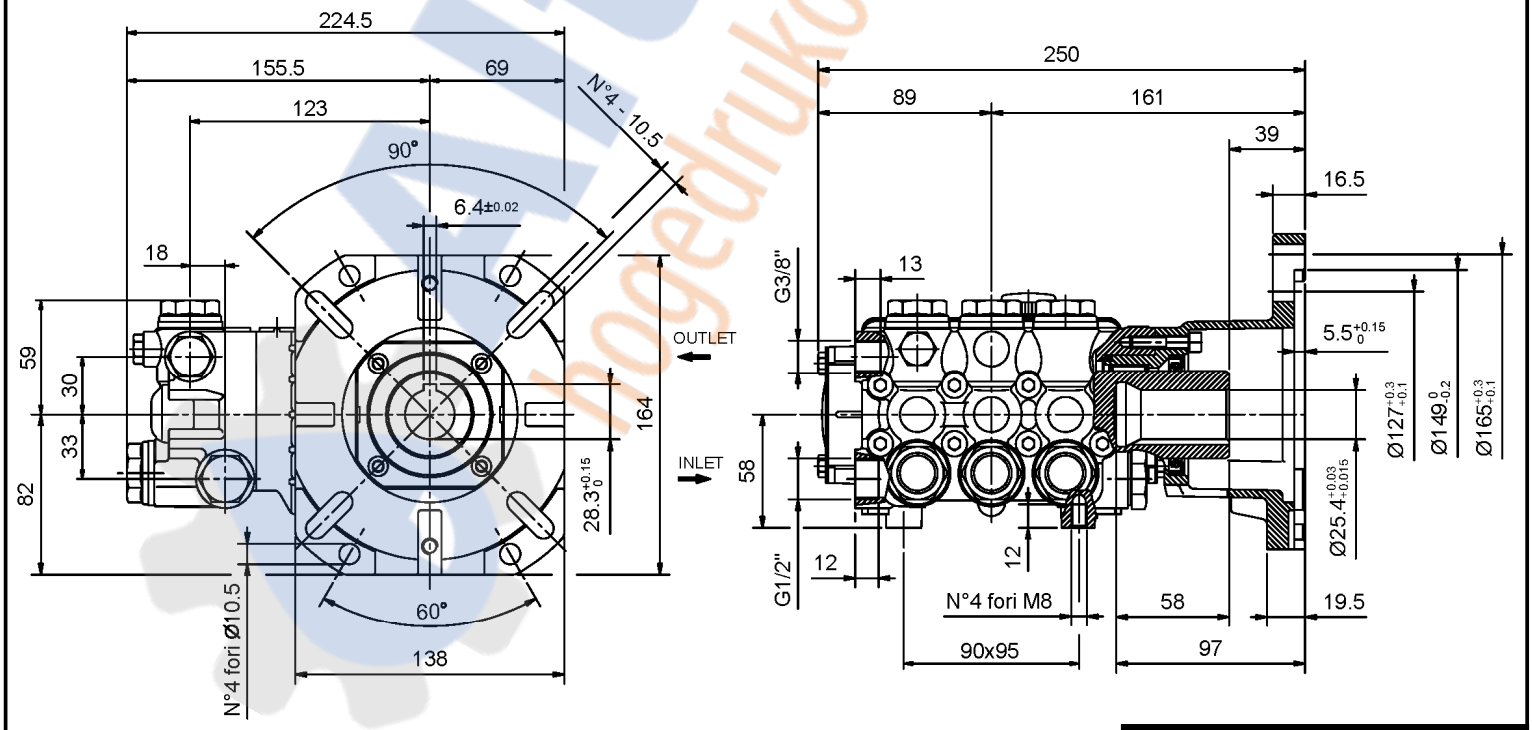

WW960 - WW961
WW962 - WW963
WW964 – WW965

C

COD. DIS. 44.2144.00

AltecPoints hogedrukonderdelen & accessoires